iver
14 - 16 STEPNEY STREET STEPNEY SA 5069

Sliding Door Pull Rectangular Pair H225xW45xP2.5mm

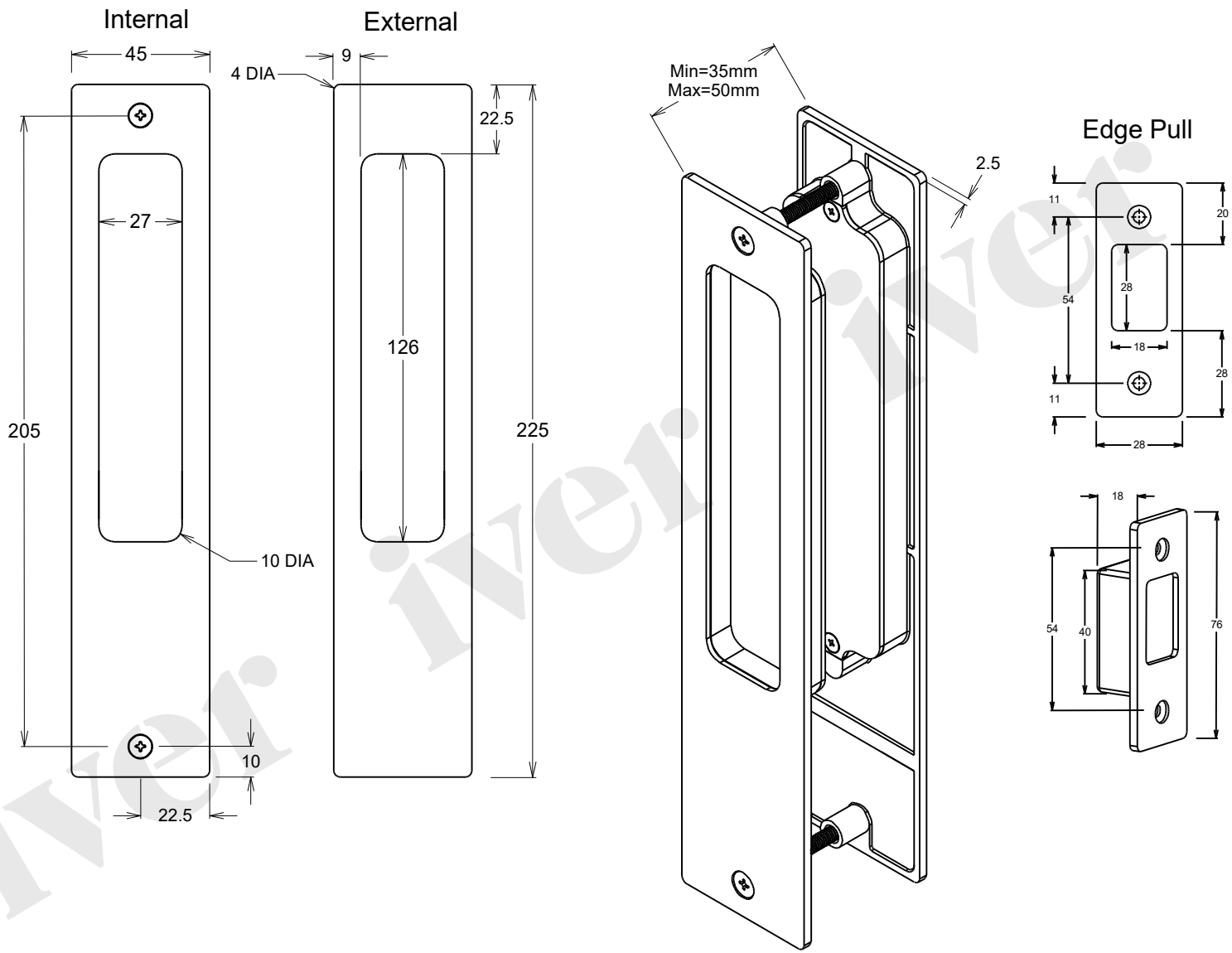

Date 14/1/2022 Revision D

Tolerance +/- 1mm

iver iver iver